MINOLTA®

2.7K QUADHD

MN2K50NV

MINOLTA 2.7K QHD DIGITAL LENS
F:3.2 f=7.5mm
48.0 MEGA PIXELS
STILL IMAGE RECORDING
2K
INFRARED NIGHT VISION
MINOLTA
MN2K50NV
SHOW TIME

MN2K50NV User Manual

1. About Your Camcorder

About this Manual

Congratulations on purchasing the Minolta MN2K50NV Camcorder!
The contents of this manual are subject to change without notice. Note that the example screens and product illustrations shown in this User's Guide may differ somewhat from the screens and configuration of the actual camera.

Copyright

This manual contains proprietary information protected by copyright. All rights are reserved. No part of this manual may be reproduced by any mechanical, electronic or other means, in any form, without prior written permission of Elite Brands Inc. © 2022.

FEDERAL COMMUNICATIONS COMMISSION INTERFERENCE STATEMENT

This equipment has been tested and found to comply with the limits for a Class B digital device, pursuant to Part 15 of the FCC Rules. These limits are designed to provide reasonable protection against harmful interference in a residential installation. This equipment generates, uses and can radiate radio frequency energy and, if not installed and used in accordance with the instructions, may cause harmful interference to radio communications. However, there is no guarantee that interference will not occur in a particular installation. If this equipment does cause harmful interference to radio or television reception, which can be determined by turning the equipment off and on, the user is encouraged to try to correct the interference by one or more of the following measures:

- Reorient or relocate the receiving antenna.
- Increase the separation between the equipment and receiver.
- Connect the equipment into an outlet on a circuit different from that to which the receiver is connected.
- Consult the dealer or an experienced radio/TV technician for help.

CAUTION:

Any changes or modifications not expressly approved by the party responsible for compliance could void the user's authority to operate the equipment.
This device complies with Part 15 of the FCC Rules. Operation is subject to the following two conditions:
(1) This device may not cause harmful interference and
(2) This device must accept any interference received, including interference that may cause undesired operation.

RF Exposure Warning

This equipment complies with FCC RF radiation exposure limits set forth for an uncontrolled environment. This equipment must be installed and operated in accordance with provided instructions and must not be co-located or operating in conjunction with any other antenna or transmitter. End-users and installers must be provided with antenna installation instructions and transmitter operating

conditions for satisfying RF exposure compliance.
FCC: SAR standard Value: 1.6 W/Kg, Maximal Measure: 0.4 W/kg

CE Mark Warning
This is a Class B product, in a domestic environment, this product may cause radio interference, in which case the user may be required to take adequate measures.

Safety and Handling Precautions

Camera Information

- Do not disassemble or attempt to service the camera yourself.
- Do not expose the camera to moisture, or extreme temperatures.
- Allow the camera to warm up when moving from cold to warm temperatures.
- Do not touch and put pressure on the camera lens.
- Do not expose the lens to direct sunlight for extended periods.
- Do not use abrasive chemicals, cleaning solvents or strong detergents to clean the product. Wipe the product with a slightly damp soft cloth.
- Do not use the flash or LED Light near a person's eyes to prevent possible eye injury.
- To prevent you from falling over or resulting in traffic accident, please do not use the camera while you are walking, driving or riding a vehicle.
- Please handle the camera strap with care, and never place the strap around the neck of an infant or child. Wrapping the strap around a neck may cause suffocation.
- Do not subject the LCD screen to impact.
- To prevent the risk of fire or electric shock, do not expose this appliance to rain or moisture.

Battery Information

- Turn off the camera before installing or removing the battery.
- Use only the provided batteries or type of battery and charger that came with your camera. Using other types of battery or charger may damage the device and invalidate the warranty.
- Inserting the battery upside down can cause damage to the product and possibly cause an explosion.
- When the camera is used for an extended period of time, it is normal for the camera body to feel warm.
- Download all pictures and remove the battery from the camera if you are going to store the camera for a long period of time.
- The type of battery and the battery power level may cause the lens to be stuck up. Ensure you use the correct battery type and use a fully charged battery.
- Risk of explosion if battery is replaced by an incorrect type. Dispose of used batteries according to the instructions.
- Please keep the batteries out of the reach of children to prevent from swallowing

batteries, which might cause poisoning.
- Once the battery's color changes or its shape is twisted, please stop using it.

USB adapter Information

- Do not expose the adapter to high temperatures or moisture places. Otherwise, it may cause fire or electric shock.
- Do not attempt to repair, disassemble, change or transform the adapter.
- Avoid sudden changes in temperature, which may cause condensation on the adapter's internal surfaces. Please do not use it immediately in this situation.
- Do not touch the plug with wet hands. Otherwise, it may cause electric shock.
- Do not use the travel voltage converter or AC/DC power inverter. Otherwise, it may cause damage, overheating, malfunction or fire to the camera.

1. About Your Camcorder

1.1 Camcorder Interface

Front View

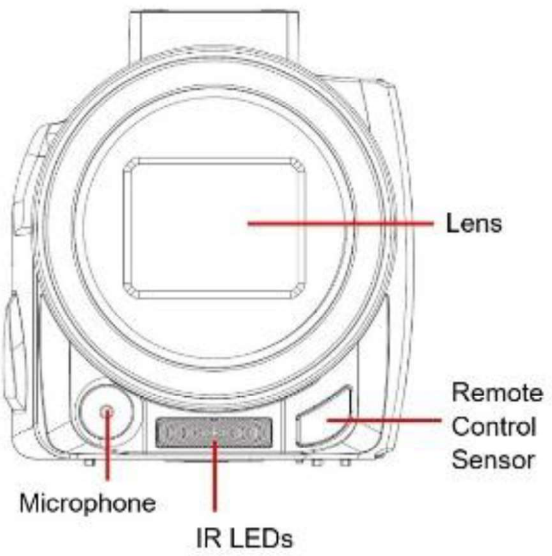
Lens
Remote Control Sensor
Microphone
IR LEDs

Rear View

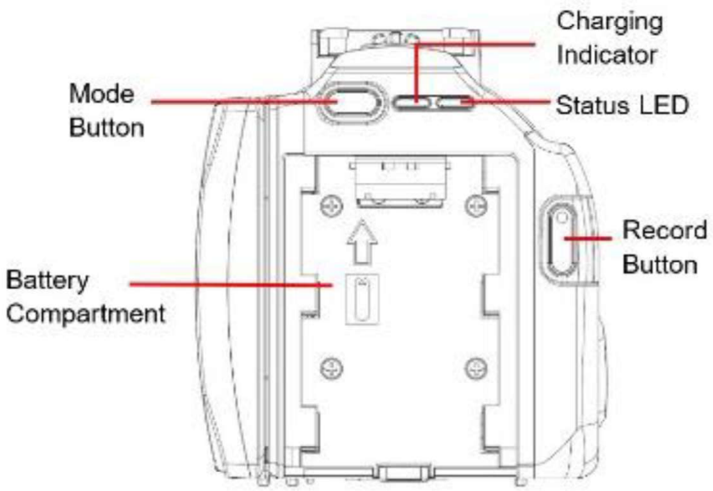
Charging Indicator
Mode Button
Status LED
Record Button
Battery Compartment

Top View

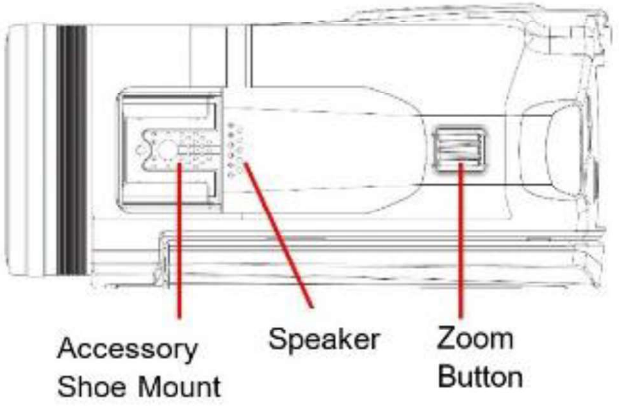
Accessory Shoe Mount
Speaker
Zoom Button

Bottom View

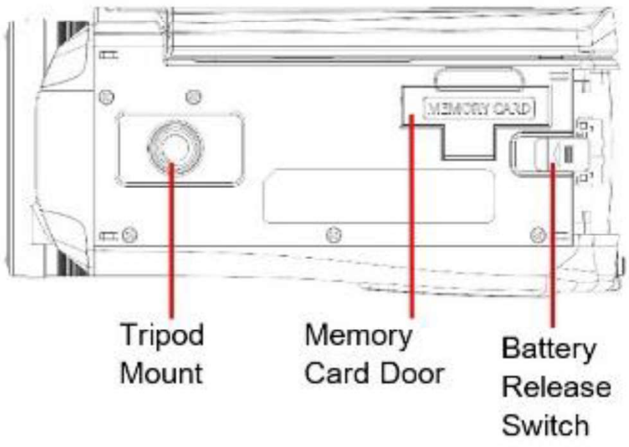
MEMORY CARD
Tripod Mount
Memory Card Door
Battery Release Switch

Inside View

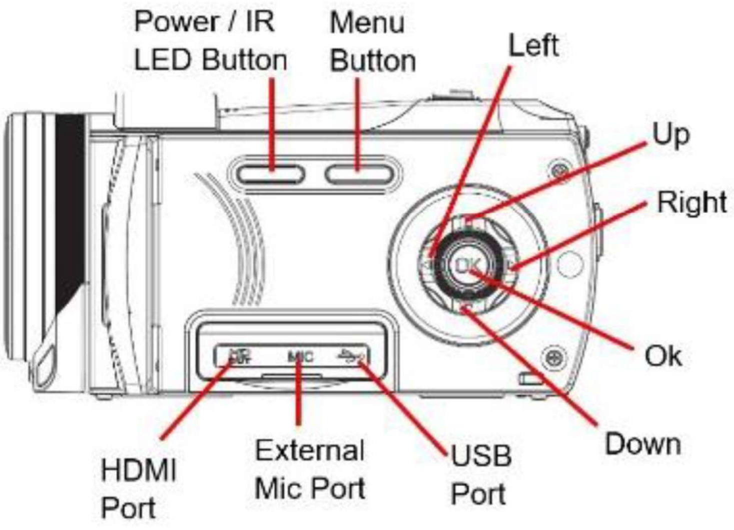
Power / IR LED Button
Menu Button
Left
Up
Right
OK
Ok
Down
HDMI
MIC
USB Port
External Mic Port
HDMI Port

1. About Your Camcorder

1.2 Button Function Description

Function	**Description**
Power | IR	Tap once to power on, press and hold for 2 seconds to power off. While powered on, tap once to enable or disable IR night vision.
Mode	Tap to cycle between Video, Photo, Playback and Setup modes.
Menu	Tap to access and exit all menus and submenus.
Zoom	**In Video or Photo:** Press right to zoom-in. Press left to zoom-out. **In Menus:** Press to go to the next setting option. **In Playback:** While viewing a photo, slide to the right to zoom in on the photo, slide to the left to zoom out. **In Video Playback:** While playing a video, press to increase or decrease the volume.
OK	**In Playback:** While playing a recorded video, tap to pause and tap again to resume. OK button in menus. Tap to confirm a setting
Record | Photo	**In Photo:** Tap to capture a photo. **In Video:** Tap to start/stop recording video. **In Playback:** Tap to play a recorded video, tap again to stop the video.
UP	Tap to scroll through menus and submenus.
Down	Tap to scroll through menus and submenus.
Left	**In Playback:** Press to scroll through media gallery. Tap to scroll through menus and submenus.
Right	**In Playback:** Press to scroll through media gallery. Tap to scroll through menus and submenus.
Infrared LEDs	Infrared LED to aid with vision and recording in darkness.
Tripod Mount	Mount port for attaching to a tripod nut.
Memory Card Door	Door to cover storage slot for inserting a memory card.

Battery Release Switch	Slide the switch to remove the battery.
Speaker	Built-in speaker output for playback of video files when audio recording is enabled.
Lens	Front capture device for all video and photo.

2. First Use

2.1 Inserting the Memory Card

Insert the included SD memory card to record and store your videos and photos. When the battery is low, media stored on the memory card will not be erased. Please insert the SD memory card by following the steps below:

1. Open the memory card door on the bottom of the camcorder by flipping it down.
2. Insert the memory card. Ensure that the metal contacts are inserted first. Push the memory card down until you hear an audible click.
   The memory card can only be inserted in one way. Do not force the card in if it will not go in smoothly.
3. Close the memory card door by flipping it back into place.
4. To remove the memory card, simply push in and the card will eject back out.

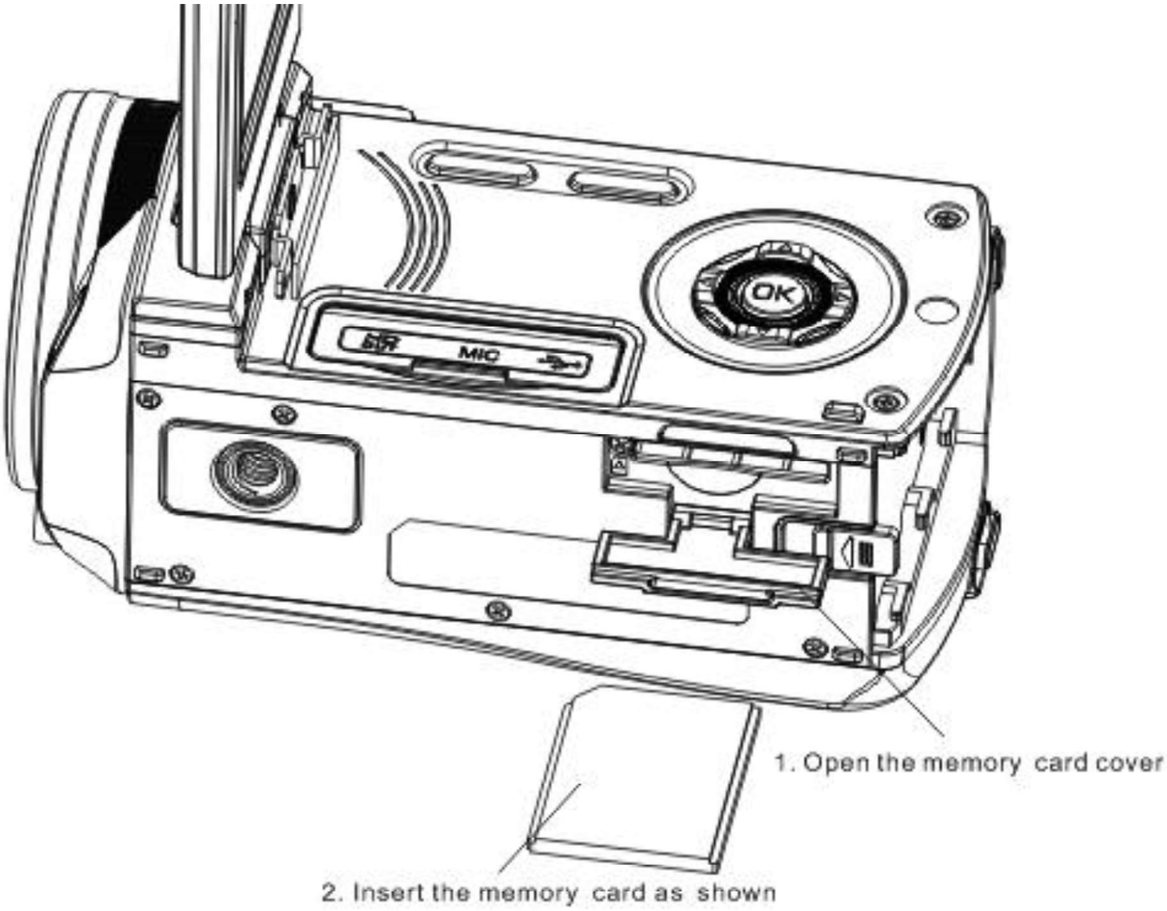
MIC
OK
1. Open the memory card cover
2. Insert the memory card as shown

NOTE:

- Please format the memory card before using the camcorder (Caution, this will erase all data on the card).

- Do not remove or insert the memory card when recording. It may damage the card or cause data loss.

- Memory card rating must be Class 10 or above.

2.2 Installing the Battery

Insert the lithium-ion battery into the battery compartment with the metal contacts facing the back of the camcorder. Take special note of the ridges on the sides of the battery and the on the body of the camcorder. The battery can only inserted one way. Mount the battery as shown and push in and up until it locks into place.

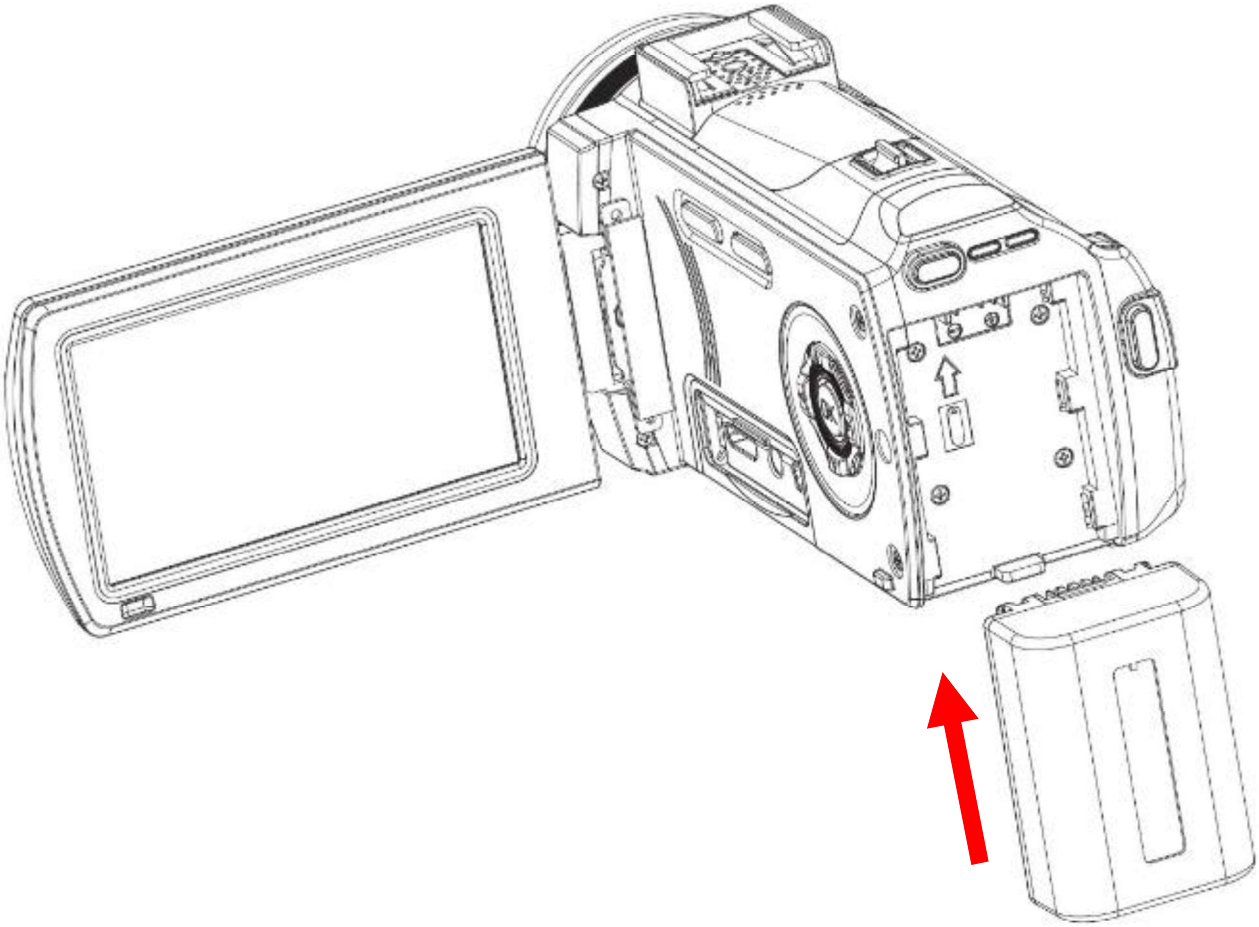

2.3 Charging the Battery

Connect your camcorder to the included AC adaptor with the USB cable provided for charging. Open the camcorder LCD screen to access the charging port. Flip down the charging port door to access the USB port. Insert the small end of the USB plug into the camcorder's port, and the larger end in to the included AC adaptor.

2.4 Powering the Camcorder On/Off

Press the POWER button to power the camcorder on. To power the camcorder off, press and hold the POWER button for 2 seconds.
The camcorder will automatically power on and off when the screen is opened or closed. If the camcorder's battery is low, a "Low Power" message will display on the screen and it will automatically shut down within a few seconds to prevent memory corruption or loss.

2.5 Switching Modes

Press the MODE button to cycle between Video, Photo, Playback and Setup Modes. The corresponding mode will be displayed in the top left corner of the screen. You may also tap the corresponding mode icon in the top left corner of the touch screen to change modes.

2.6 Connecting to a Computer

Your camcorder can connect to a computer to transfer photo and video files for viewing and editing, as shown below. Once connected and powered on, the camcorder's screen will enter "Mass Storage" mode automatically.

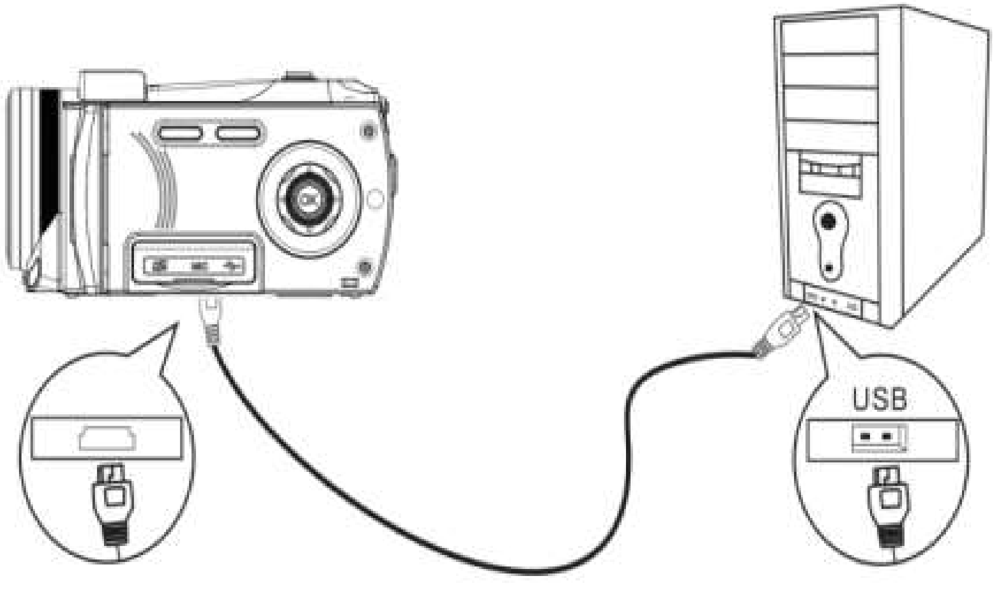

2.7 Connecting to a TV

The camcorder can also be connected to a TV. When connected, the camcorder screen will turn off and the camcorder will function normally. Use the TV as the camcorder monitor.

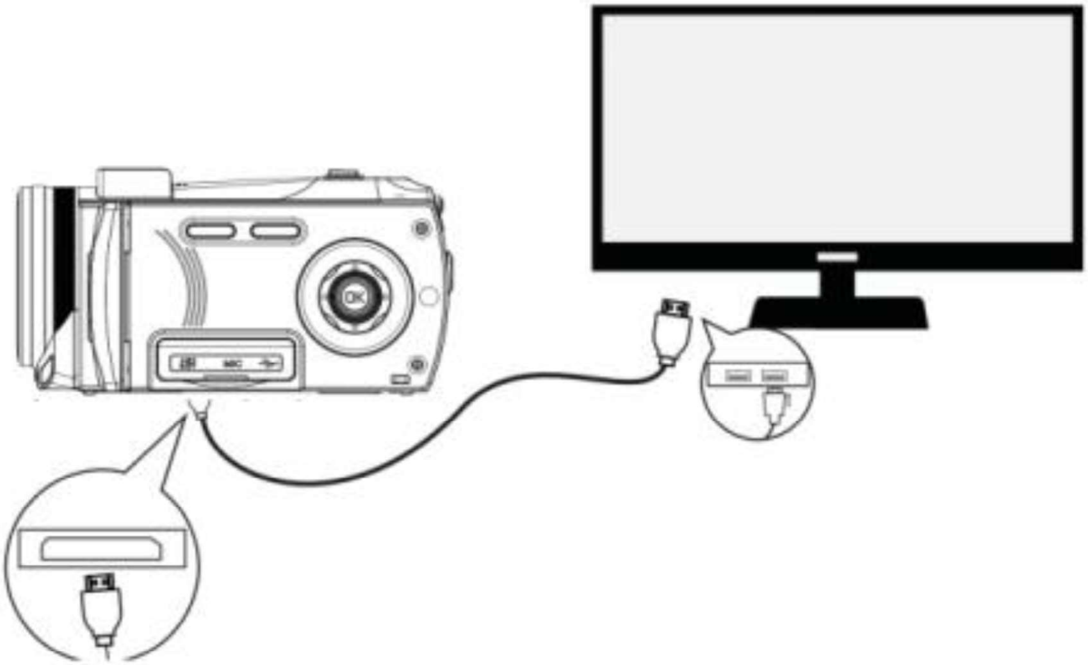

2.8 Video Mode

Press the MODE button to switch to Video Mode. The meaning of each icon within Video Mode is explained in the table below:

1) Video Mode	7) Zoom Indicator	13) White Balance
2) Video Size (Resolution)	8) Battery Level	14) Menu
3) Beauty Filter Icon	9) Effect	15) Current Date and Time
4) IR Light Indicator	10) Sharpness	16) Loop Recording
5) Recording Time Remaining	11) ISO	17) External Mic Connected
6) Memory Card Inserted	12) Exposure	

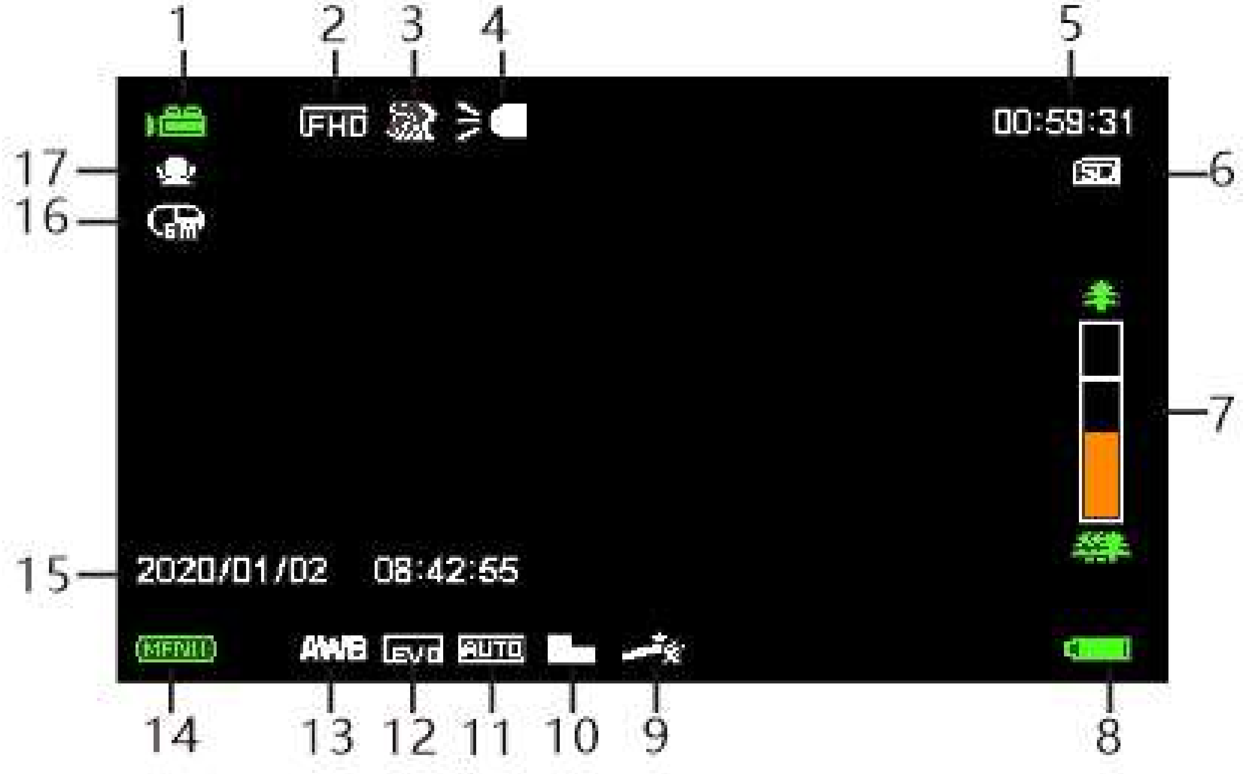
1
2
3
4
5
FHD
00:59:31
17
16
6
SD
7
15
2020/01/02 08:42:55
MENU
AWB
EV0
AUTO
14
13
12
11
10
9
8

2.9 Photo Mode

Press the MODE button to switch to Photo Mode. The meaning of each icon within Photo Mode is explained in the table below:

1) Photo Mode	8) Number of Photos Remaining	15) Exposure
2) Photo Size (Resolution)	9) Memory Card Inserted	16) Image Quality
3) Beauty Filter	10) Zoom Indicator	17) White Balance
4) Anti-Shake	11) Battery Level	18) Menu
5) Face Detection	12) Effect	19) Current Time and Date
6) Smile Capture	13) Sharpness	20) Self Timer
7) IR Light Indicator	14) ISO	

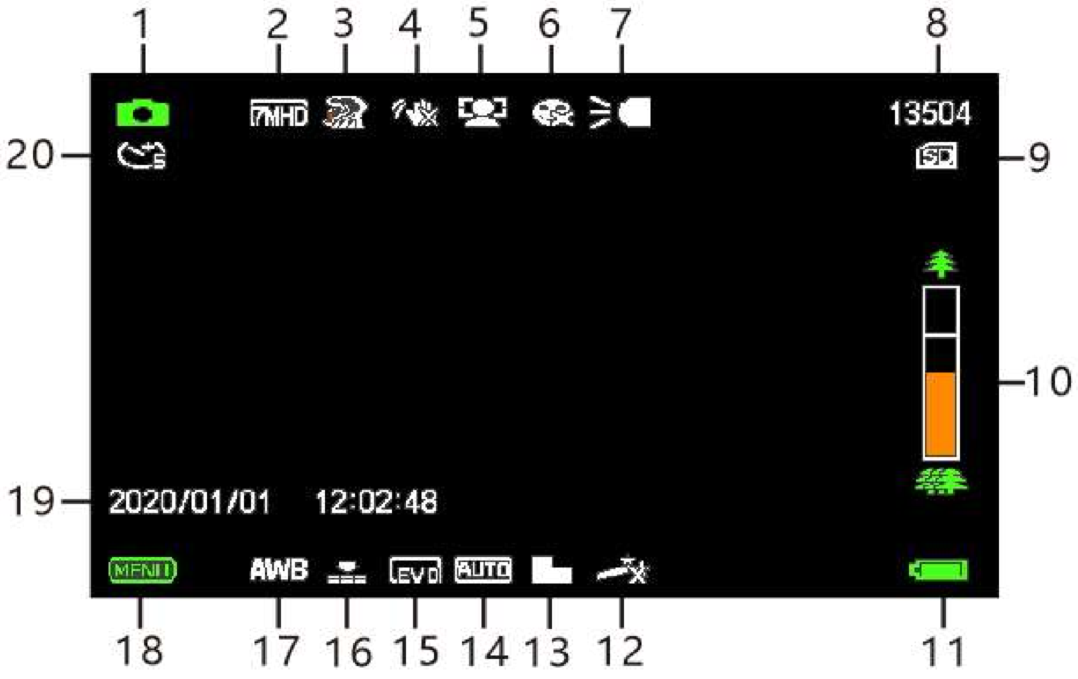
1
2
3
4
5
6
7
8
7MHD
13504
20
9
SD
10
19
2020/01/01 12:02:48
MENU
AWB
EV0
AUTO
18
17
16
15
14
13
12
11

2.10 Using the Zoom Function

This camcorder has a digital zoom function. To operate the zoom function, slide the ZOOM button right to zoom in closer to the subject, and to the left to zoom away from the subject.

2.11 Using the IR Night Vision Mode

This camcorder has built-in infrared (IR) LEDs for night vision recording - giving you the ability to capture photos and videos in a dark environment.

In Photo or Video mode, short-press the POWER/IR button once to enable the IR LED light. When the IR LED light is enabled, the IR LED light indicator on the top of the screen will be displayed.
To disable the IR light, short-press the POWER/IR button again. You will notice that the IR light indicator on the screen is no longer showing.

Note:
The photos and videos taken while the IR LED is enabled will be recorded in black and white.

The IR LED can also be enabled or disabled during a recording.

2.12 Attaching External Accessories

This camcorder supports lens filters & attachments, external microphones and assistive lighting utilizing power from the hot-shoe mount. When attaching an external microphone, be sure to mount it to the hot-shoe mount and also insert the 3.5mm plug into the MIC port.

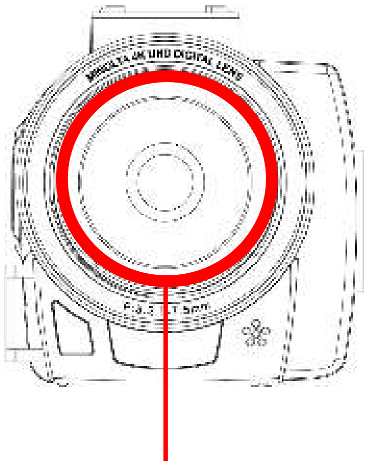
37mm Diameter
Threading

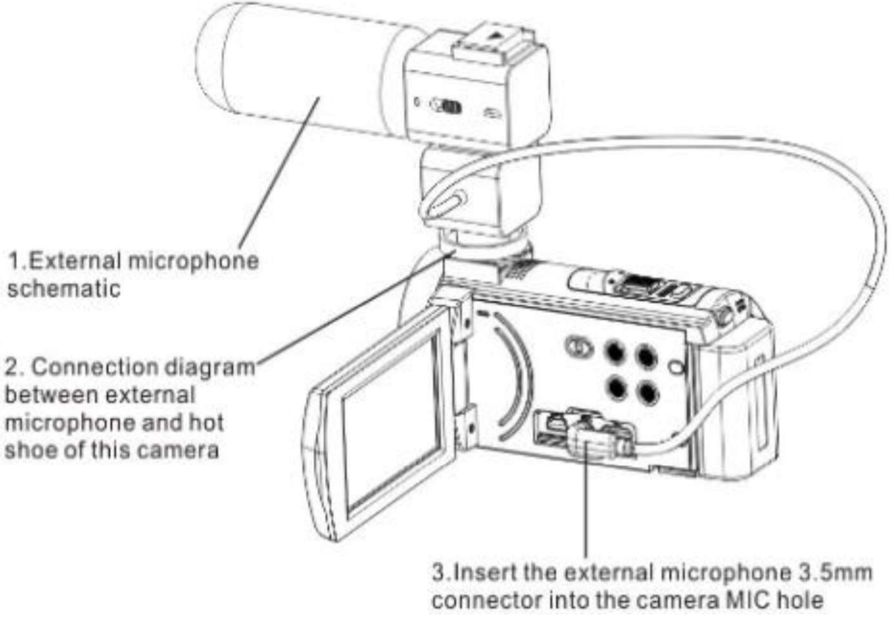
1.External microphone schematic
2. Connection diagram between external microphone and hot shoe of this camera
3.Insert the external microphone 3.5mm connector into the camera MIC hole

2.13 Remote Control

Note: Before using the remote, remove the battery tab on the back.

When using the remote, it should be pointed towards the remote control receiver on the front the camcorder. There shouldn't be any objects in between the remote and camcorder as they can block the signal from the remote.

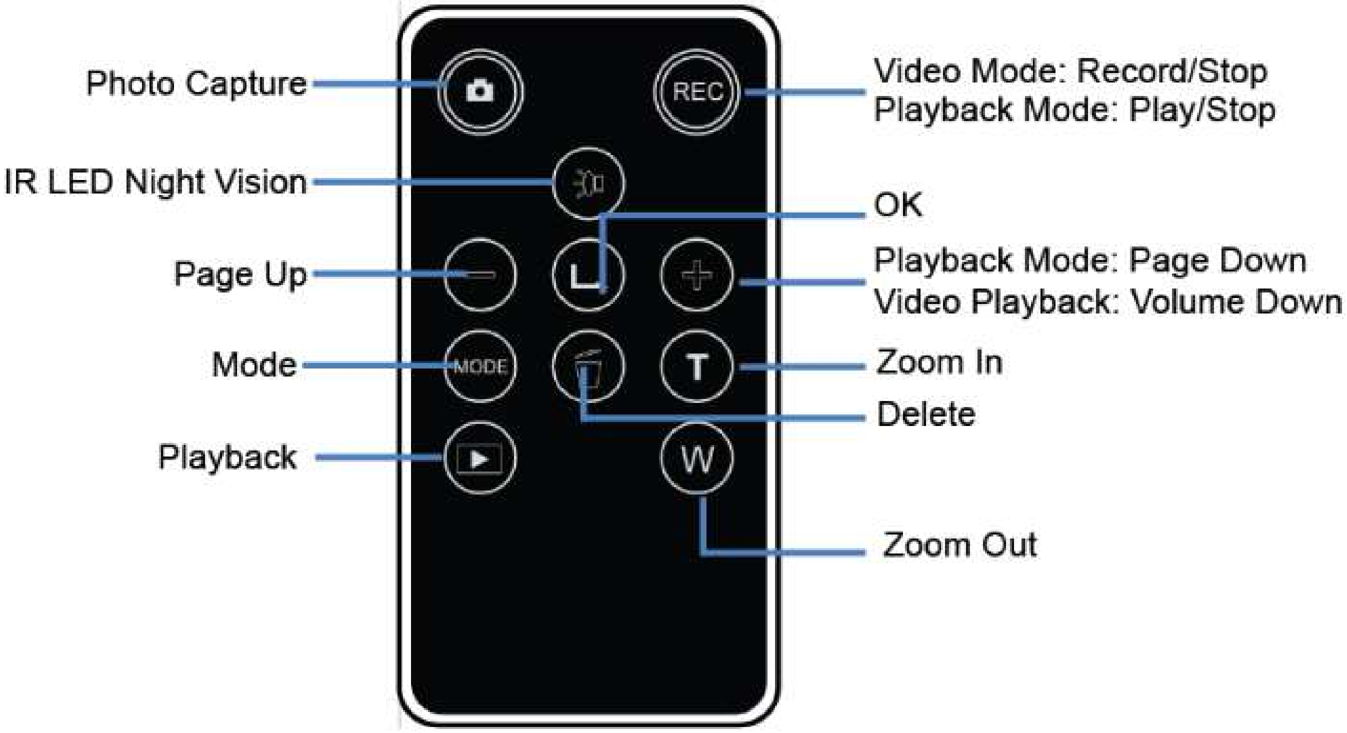
Photo Capture
IR LED Night Vision
Page Up
Mode
Playback
REC
MODE
T
W
Video Mode: Record/Stop
Playback Mode: Play/Stop
OK
Playback Mode: Page Down
Video Playback: Volume Down
Zoom In
Delete
Zoom Out

3. Using the Camcorder

3.1 Video Recording

Power the camcorder on and it will be ready to record clips right away. You may press the MODE button or press the icon in the top left corner of the touch screen to switch to another mode. A camcorder icon will appear in the top left hand corner of the screen when you are in Video mode.

1. Line up your shot by looking at the LCD screen to see what is in view.
2. Hold the camcorder steady and press the RECORD button to begin recording.
3. When recording begins, a rolling timer will display in red in the top right hand corner of the screen. This indicates the recorded video time elapsed.
4. Press the RECORD button to stop recording.
5. The recorded video files will automatically save onto the inserted memory card.

3.1.1 Movie Size (Resolution)

Your camcorder has a number of preset resolutions.

1. In Video Mode press the MENU button.
2. Select *‘Movie Size’* using the LEFT or RIGHT buttons and press the OK button to enter the *‘Movie Size’* submenu.
3. Press the LEFT or RIGHT buttons to navigate the menu and press the OK button to confirm your selected setting *(2.7K, 1080P, 720P, 480P)*. A higher resolution and faster frames per second rate will produce a higher quality and larger video file.
4. Press the MENU button to exit the menu without making a selection.

3.1.2 Sharpness

This function adjusts the visible detail of a photograph.

1. In Video Mode, press the MENU button.
2. Select *‘Sharpness’* using the LEFT or RIGHT buttons and press the OK button to enter the *‘Sharpness’* submenu.
3. Press the LEFT or RIGHT buttons to navigate the menu and press the OK button to confirm how sharp you would like your video to be (Sharp, Normal, Soft).
4. Press the MENU button to exit the menu without making a selection.

3.1.3 White Balance

White Balance changes the color of light in your pictures, making it seem warmer or cooler depending on how the light you're shooting in affects the frame.

1. In Video Mode press the MENU button.

2. Select *'White Balance'* using the LEFT or RIGHT buttons and press the OK button to enter the *'White Balance'* submenu.
3. Press the LEFT or RIGHT buttons to navigate the menu and press the OK button to confirm your selected setting *(Auto, Daylight, Cloudy, Fluorescent, Tungsten)*.
4. Press the MENU button to exit the menu without making a selection.

3.1.4 Exposure

This function adjusts the frame brightness in your video.

1. In Video Mode press the MENU button.
2. Select *'Exposure'* using LEFT or RIGHT buttons and press the OK button to enter the *'Exposure'* submenu.
3. Press the LEFT or RIGHT buttons to navigate the menu and press the OK button to confirm your selected exposure mode *(+3, +2, +1, 0, -1, -2, -3)*.
4. Press the MENU button to exit the menu without making a selection.

3.1.5 ISO

This function adjusts the light sensitivity in your photograph.

1. In Video Mode press the MENU button.
2. Select *'ISO'* using the LEFT or RIGHT buttons and press the OK button to enter the *'ISO'* submenu.
3. Press the LEFT or RIGHT buttons to navigate the menu and press the OK button to confirm your selected ISO *(Auto, 100, 200, 400)*.
4. Press the MENU button to exit the menu without making a selection.

3.1.6 Loop Recording

This function allows you to set a maximum duration for each video clip recorded.

1. In Video Mode press the MENU button.
2. Select *'Loop Recording'* using the LEFT or RIGHT buttons and press the OK button to enter the *'Loop Recording'* submenu.
3. Press the LEFT or RIGHT buttons to select the required loop duration option (*On, Off, Loop Duration)*, and press the OK button to confirm your selected option.
4. To select the length of the loop recording select 'Loop Duration' and press the OK button.
5. Use the LEFT or RIGHT buttons to select your desired loop duration and press the OK button to select your desired setting *(1 Minute, 3 Minutes, 5 Minutes, 10 Minutes)*.
6. Press the MENU button to exit the menu without making a selection.

Once you select an option, your camcorder will record video clips in this interval only. Once this duration is reached, the camcorder will

seamlessly end recording and begin recording a new video file.

3.1.7 Time-Lapse

This feature allows you to capture long sequences of events in a much shorter time period.

1. In Video Mode press the MENU button.
2. Select *'Time Lapse'* using the LEFT or RIGHT buttons and press the OK button to enter the *'Time Lapse'* submenu.
3. Press the LEFT or RIGHT buttons to navigate the menu and press the OK button to confirm your selected setting *(Off, Interval of 1 Second, 5 Seconds, 10 Seconds, 30 Seconds, 60 Seconds)*.
4. Press the MENU button to exit the menu without making a selection.

NOTE: By selecting *'10Sec'* the camera will capture a photo every 10 seconds and create a time-lapse video. To disable Time-Lapse recording, select '*Off'* in this submenu.

3.1.8 Effect

This function sets the color filter effect of a video.

1. In Video Mode press the MENU button.
2. Select *'Effect'* using the LEFT or RIGHT buttons and press the OK button to enter the *'Effect'* submenu.
3. Press the LEFT or RIGHT buttons to navigate the menu and press the OK button to confirm your selected filter *(Normal, Black & White, Sepia, Red, Green, Blue, Sunset, Warm, Cool, Over Exposure, IR, Binary, Vivid, Undertone, Dog Eye, Aibao, Gothic, Japan Style, LOMO, Negative)*.
4. Press the MENU button to exit the menu without making a selection.

3.1.9 Scene Mode

This function adjusts the camera's settings to predetermined values that will produce the best image for that selected scene.

1. In Video Mode press the MENU button.
2. Select *'Scene Mode'* using the LEFT or RIGHT buttons and press the OK button to enter the *'Scene Mode'* submenu.
3. Press the LEFT or RIGHT buttons to navigate the menu and press the OK button to confirm your selected option *(Auto, Night, Portrait, Landscape, Backlight, Sport, Party, Beach, High Sensitivity)*.
4. Press the MENU button to exit the menu without making a selection.

3.1.10 Beauty Filter

This feature applies a filter effect on the people in the scene.

1. In Video Mode press the MENU button.

2. Select *‘Beauty Filter’* using the LEFT or RIGHT buttons and press the OK button to enter the *‘Beauty Filter’* submenu.
3. Press the LEFT or RIGHT buttons to navigate the menu and press the OK button to confirm your selected option *(On, Off)*.
4. Press the MENU button to exit the menu without making a selection.

3.2 Photo Shooting

Power the camcorder on and press the MODE button or press the icon in the top left hand corner of the touch screen to switch to Photo mode.

1. Line up your shot by looking at the LCD screen to see what is in the shot.
2. Hold the camera steady, press the PHOTO button to capture a photo.
3. The number of photos that can be captured at a particular resolution will be displayed in the top right corner of the screen.
4. The number of remaining photos is determined by the selected photo resolution. The higher the photo resolution, the lower the number of photos you are able to be save to the memory card. Before capturing any photos, you can select a preferred photo resolution.

3.2.1 Photo Size (Resolution)

This function sets the photo resolution. The higher the resolution, the greater the photo quality and the larger the file size of the photo.

1. In Photo Mode press the MENU button.
2. Select *'Photo Size'* using the LEFT or RIGHT buttons and press the OK button to enter the *'Photo Size'* submenu.
3. Press the LEFT or RIGHT buttons to navigate the menu and press the OK button to confirm the selected photo resolution *(48 MP, 30 MP, 24 MP, 20 MP, 16 MP, 12 MP, 10 MP, 8 MP, 7 MP Wide, 5 MP, 3 MP)*.
4. Press the MENU button to exit the menu without making a selection.

3.2.2 Quality

The Photo Quality function determines the level of compression the camcorder uses when saving photos to a memory card.

1. In Photo Mode press the MENU button.
2. Select *'Quality'* using the LEFT or RIGHT buttons and press the OK button to enter the *'Quality'* submenu.
3. Press the LEFT or RIGHT buttons to select the required quality option *(Super Fine, Fine, Normal)*, and press the OK button to confirm your selected image option. Super Fine uses the least amount of compression for saving, and as a result produces a higher photo quality.
4. Press the MENU button to exit the menu without making a selection.

3.2.3 Sharpness

This function adjusts the visible detail of a photograph.

1. In Photo Mode, press the MENU button.
2. Select *'Sharpness'* using the LEFT or RIGHT buttons and press the OK button to enter the *'Sharpness'* submenu.
3. Press the LEFT or RIGHT buttons to navigate the menu and press the OK

button to confirm how sharp you would like your photograph to be (*Sharp, Normal, Soft)*.
4. Press the MENU button to exit the menu without making a selection.

3.2.4 White Balance

White Balance changes the color of light in your pictures, making it seem warmer or cooler depending on how the light you're shooting in affects the frame.

1. In Photo Mode press the MENU button.
2. Select *'White Balance'* using the LEFT or RIGHT buttons and press the OK button to enter the *'White Balance'* submenu.
3. Press the LEFT or RIGHT buttons to navigate the menu and press the OK button to confirm your selected setting *(Auto, Daylight, Cloudy, Fluorescent, Tungsten)*.
4. Press the MENU button to exit the menu without making a selection.

3.2.5 ISO

This function adjusts the light sensitivity in your photograph.

1. In Photo Mode press the MENU button.
2. Select *'ISO'* using the LEFT or RIGHT buttons and press the OK button to enter the *'ISO'* submenu.
3. Press the LEFT or RIGHT buttons to navigate the menu and press the OK button to confirm your selected ISO *(Auto, 100, 200, 400)*.
4. Press the MENU button to exit the menu without making a selection.

3.2.6 Exposure

This function adjusts the frame brightness in your video.

1. In Photo Mode press the MENU button.
2. Select *'Exposure'* using the LEFT or RIGHT buttons and press the OK button to enter the *'Exposure'* submenu.
3. Press the LEFT or RIGHT buttons to navigate the menu and press the OK button to confirm your selected exposure mode *(+3, +2, +1, 0, -1, -2, -3)*.
4. Press the MENU button to exit the menu without making a selection.

3.2.7 Self-Timer

This function determines the time delay before a photograph is captured. This setting can be used by photographers to take photographs of themselves.

1. In Photo Mode press the MENU button.
2. Select *'Self-Timer'* using the LEFT or RIGHT buttons and press the OK button to enter the *'Self-Timer'* submenu.

3. Press the LEFT or RIGHT buttons to navigate the menu and press the OK button to confirm your selected option *(Off, 2 Seconds, 5 Seconds, 10 Seconds)*.
4. Press the MENU button to exit the menu without making a selection.

3.2.8 Photo Burst

This function allows to you capture 3 consecutive photos with one click of the PHOTO button.

1. In Photo Mode press the MENU button.
2. Select *'Photo Burst'* using the LEFT or RIGHT buttons and press the OK button to enter the *'Photo Burst'* submenu.
3. Press the LEFT or RIGHT buttons to navigate the menu and press the OK button to confirm your selected setting *(Off, 3 Photos)*.
4. Press the MENU button to exit the menu without making a selection.

3.2.9 Effect

This function sets the color filter effect of a photo.

1. In Photo Mode press the MENU button.
2. Select *'Effect'* using the LEFT or RIGHT buttons and press the OK button to enter the *'Effect'* submenu.
3. Press the LEFT or RIGHT buttons to navigate the menu and press the OK button to confirm your selected filter *(Normal, Black & White, Sepia, Red, Green, Blue, Sunset, Warm, Cool, Over Exposure, IR, Binary, Vivid, Undertone, Dog Eye, Aibao, Gothic, Japan Style, LOMO, Negative)*.
4. Press the MENU button to exit the menu without making a selection.

3.2.10 Anti-Shake

This function enables photo capture in high speed and low-light by electronically minimizing motion blur and reducing camera shake.

1. In Photo Mode press the MENU button.
2. Select *'Anti-Shaker'* using the LEFT or RIGHT buttons and press the OK button to enter the *'Anti-Shake'* submenu.
3. Press the LEFT or RIGHT buttons to navigate the menu and press the OK button to confirm your selected option *(Off, On)*.
4. Press the MENU button to exit the menu without making a selection.

3.2.11 Scene Mode

This function adjusts the camera's settings to predetermined values that will produce the best image for that selected scene.

1. In Photo Mode press the MENU button.

2. Select *'Scene Mode'* using the LEFT or RIGHT buttons and press the OK button to enter the *'Scene Mode'* submenu.
3. Press the LEFT or RIGHT buttons to navigate the menu and press the OK button to confirm your selected option *(Auto, Night, Portrait, Landscape, Backlight, Sport, Party, Beach, High Sensitivity)*.
4. Press the MENU button to exit the menu without making a selection.

3.2.12 Face Detection

This function allows you to set your camera to detect faces in a scene and adjust your camera's setting for the most optimal picture. You can also enable your camera to capture a photo once a smile is detected on the faces in a scene.

1. In Photo Mode press the MENU button.
2. Select *'Face Detection'* using the LEFT or RIGHT buttons and press the OK button to enter the *'Face Detection'* submenu.
3. Press the LEFT or RIGHT buttons to navigate the menu and press the OK button to confirm your selected option *(Off, On)*. The On setting will enable Face Detection.
4. Press the MENU button to exit the menu without making a selection.

3.2.13 Smile Capture

This function allows you to set your camera to detect smiles in a scene and for it to capture a photo automatically.

1. In Photo Mode press the MENU button.
2. Select *'Smile Capture'* using the LEFT or RIGHT buttons and press the OK button to enter the *'Smile Capture'* submenu.
3. Press the LEFT or RIGHT buttons to navigate the menu and press the OK button to confirm your selected option *(Off, On)*. The Smile Detect setting will enable your camera to capture a photo once a smile is detected on the faces in a scene.
4. Press the MENU button to exit the menu without making a selection.

3.2.14 Beauty Filter

This feature applies a filter effect on the people in the scene.

1. In Photo Mode press the MENU button.
2. Select *'Beauty Filter'* using the LEFT or RIGHT buttons and press the OK button to enter the *'Beauty Filter'* submenu.
3. Press the LEFT or RIGHT buttons to navigate the menu and press the OK button to confirm your selected option *(On, Off)*.
4. Press the MENU button to exit the menu without making a selection.

3.3 Playback Mode

Videos and photos captured on your camcorder can be easily played back.

1. Press the LEFT or RIGHT buttons to cycle through the captured videos and photos stored on the memory card.
2. When viewing a photo push the ZOOM button to the right and it will zoom in on the picture on the screen. Use the touch screen to navigate while zoomed in.
3. Use the UP, DOWN, LEFT or RIGHT buttons to move the image on the screen.

Power the camcorder on and press the MODE button to switch to Playback Mode. In Playback Mode the following options are available:

3.3.1 Delete

This function is used to delete photos and videos. Photos and videos can be deleted singly or all at once.

1. In Playback Mode press the MENU button, and use the LEFT or RIGHT buttons to select *‘Delete’*. Press the OK button to enter the *‘Delete’* submenu.
2. Press the LEFT or RIGHT buttons to navigate the menu and press the OK button for your selected setting *(This Image, All*).
3. Press the MENU button to exit the menu without deleting any pictures or videos.

3.3.2 Protect

This function protects the photo/video file. The file will be protected from being deleted accidentally. Files must be unprotected to be deleted.

1. In Playback Mode press the MENU button, and use the LEFT or RIGHT buttons to select *‘Protect’* and press the OK button to enter the *‘Protect’* submenu.
2. Press the LEFT or RIGHT buttons to navigate the menu and press the OK button to confirm your selected setting *(Lock This, Unlock This, Lock All, Unlock All)*.
3. Press the MENU button to exit the menu without protecting any pictures or videos.

3.3.3 Rotate

This function is used to rotate images.

1. In Playback Mode press the MENU button, and use the LEFT or RIGHT buttons to select *‘Rotate’*. Press the OK button to enter the

‘Rotate’ submenu.

2. Press the LEFT or RIGHT buttons to navigate the menu and press the OK button for your selected setting *(90°, 180°, 270°)*.
3. Press the MENU button to exit the menu without rotating the current picture.

3.3.4 Slideshow

Photographs can be viewed as a slideshow on the camcorder.

1. In Playback Mode press the MENU, and use the LEFT or RIGHT buttons to select *‘Slideshow’* Press the OK button to enter the *‘Slideshow’* submenu.
2. Press the LEFT or RIGHT buttons to navigate the menu and press the OK button to confirm your selected setting *(3 Seconds, 5 Seconds, 10 Seconds)*.
3. Once the time duration has been chosen, the slideshow will start playing.
4. Press the RECORD button to stop the slideshow.
5. To exit the ‘*Slideshow*’ submenu, press the MENU button.

3.3.5 Video Playback

Videos can be played back and viewed on your camcorder.

1. In Playback Mode, press the LEFT or RIGHT buttons to select the video file for playback.
2. Press the RECORD button to start playing the video. Press the RECORD button a second time to stop the video.
3. During playback, push the ZOOM button (left or right) to raise and lower the volume of the video.
4. During playback, press the OK button to pause the video.

3.4 Setup Menu

Basic settings can be changed in the Setup menu. These include date & time, language and sound options. Power the camera on and press the MODE button, or press the icon in the top left hand corner of the touch screen to switch to setup mode. A menu will display on the screen.

3.4.1 Language

This function allows you to set the camcorder's interface language.

1. In Setup Mode use the LEFT or RIGHT buttons to select *'Language'* and press the OK button to enter the *'Language'* submenu.
2. Press the LEFT or RIGHT buttons to select your desired language. Then press the OK button to confirm your selection.

3.4.2 Date and Time

This function allows you to set the current Date and Time on your recorded video clips and captured photos.

1. In Setup Mode use the LEFT or RIGHT buttons to select *'Date and Time'* and press the OK button to enter the *'Date and Time'* submenu.
2. Press the LEFT or RIGHT buttons to select your desired setting *(Date and Time Stamp On, Date and Time Stamp Off, Date and Time Set)*, then press the OK button to confirm your selection.
3. To set the current date and time, select *'Date and Time Set'* and press the OK button to enter the date and time set submenu.
4. Press the LEFT or RIGHT buttons to switch between year, month, date, hours, minutes and seconds.
5. Once highlighted on your desired field, press the UP or DOWN buttons to cycle through numbers.
6. Once completed with all of the fields, press the OK button to confirm the changes.
7. Press the MENU button to exit the menu without making a selection.

3.4.3 Power Save

This function sets the duration of time in which the camcorder will wait with no user input before automatically powering off.

1. In Setup Mode use the LEFT or RIGHT buttons to navigate and select *'Power Save'* and press the OK button to enter the *'Power Save'* submenu.
2. Press the LEFT or RIGHT buttons to navigate the menu and press the OK button to confirm your selected setting *(Off, 1 Minute, 3 Minutes, 5 Minutes)*.
3. Press the MENU button to exit the menu without making a selection.

3.4.4 Beep Sound

This function can turn the sound the camcorder makes after pressing a button, on or off.

1. In Setup Mode, use the LEFT or RIGHT buttons to select *'Beep Sound'* and press the OK button to enter the *'Beep Sound'* submenu.
2. Press the LEFT or RIGHT buttons to select your desired setting *(On, Off)*, Then press the OK button to confirm your selection.
3. Press the MENU button to exit the menu without making a selection.

3.4.5 Frequency

This function sets the frequency of the camcorder from 50Hz to 60Hz. Please check the frequency of your location and set accordingly.

1. In Setup Mode use the LEFT or RIGHT buttons to select *'Frequency'* and press the OK button to enter the *'Frequency'* submenu.
2. Press the LEFT or RIGHT buttons to select your desired frequency. Then press the OK button to confirm your selection (*50Hz, 60Hz)*. The default frequency for the United States is 60Hz.
3. Press the MENU button to exit the menu without making a selection.

3.4.6 Format Memory Card

The format setting erases all photos, videos and data stored on your memory card.

1. In Setup Mode use the LEFT or RIGHT buttons to select *'Format Memory Card'* and press the OK button to enter the submenu.
2. Press the LEFT or RIGHT buttons to navigate the menu and press the OK button for your selected setting *(Yes, No)*.
3. Press the MENU button to exit the menu without making a selection.

NOTE: This will delete all of your media and cannot be undone.

3.4.7 Restore Default Settings

Factory default settings can be restored in this menu. This function will not delete the media stored on the memory card, and will only restore all of the menu's setting back to factory default settings.

1. In Setup Mode use the LEFT or RIGHT buttons to select *'Restore Default Settings'* and press the OK button to enter the *'Restore Default Settings'* submenu.
2. Press the LEFT or RIGHT buttons to navigate the menu and press the OK button to confirm your selection *(Yes, No)*.
3. Press the MENU button to exit the menu without making a selection.

3.4.8 Touch Screen Calibration

The LCD touch screen can be calibrated by following these steps.

1. In Setup Mode use the LEFT or RIGHT buttons to select *'Touch Screen Calibration'* and press the OK button to start calibrating the screen.
2. There will be a small plus sign that then shows in the bottom left corner of the screen, try to touch the plus sign as close to center as possible.
3. After touching that plus sign you will be prompted to touch 4 more plus signs, one in each of the remaining three corners and one in the center of the screen.
4. After touching the last plus sign, the calibration will be complete.
5. You can perform the touch screen calibration as many times as needed.

4. Appendix

4.1 Technical Specifications

Model Number	Minolta MN2K50NV
Lens	Fixed Focus • f=7.5mm • F/3.2 • 37mm Front Threading for Lens Accessory Attachments
Zoom	16X Digital Zoom
Image Sensor	8MP CMOS Sensor
Shutter	Electronic • Anti-Shake Image Stabilization
Pixels (photo)	JPEG: 48 MP • 30 MP • 24 MP • 20 MP • 16 MP • 12 MP • 10 MP • 8 MP • 7 MP • 5 MP • 3 MP
Pixels (video)	AVI: 2.7K • 1080p • 720p • VGA
ISO Sensitivity	Auto • 100 • 200 • 400
LCD Monitor	3.0 Inch IPS Touch Screen LCD
Assistive Light	Infrared LED (for shooting in dark scenery)
Power Saving Mode	OFF • 1 Minute • 3 Minutes • 5 Minutes
White Balance Control	Auto • Daylight • Cloudy • Fluorescent • Tungsten
Scene Modes	Auto • Night • Portrait • Landscape • Backlight • Sport • Party • Beach • High Sensitivity
Special Features	Photo Burst • Face Detection • Color Filters • Anti-Shake • Time-Lapse
Accessory Shoe Mount	Yes, for external MIC or Assistive Lighting
Recording Media	SD • SDHC; Maximum: 128GB
I/O Ports	5-pin Mini USB 2.0 • Mini HDMI C Type • 3.5mm Microphone Input
Power	NP-180; 3.7v, 1400mAH
Dimensions	4.8 x 2.1 x 2.47 in. • 10.9 oz.

Minolta is a registered trademark of JMM Lee Properties, LLC
and is used in the United States by Elite Brands Inc. under license.

40 Wall Street, 61st Floor, New York, NY 10005 USA • Tel: 800-441-1100
www.minoltadigital.com • www.elitebrands.com
Copyright © 2022 Elite Brands Inc.

If you're having difficulties with your camera, or would like further assistance, please call our toll-free technical support hotline at 800-441-1100. Please be sure to have your camera handy when calling.

MINOLTA®

MN2K50NV